REV	LTR	DESCRIPTION	DATE	REVISER	APPD

Pb Process Capable

RoHS Compliant 2002/95/EC

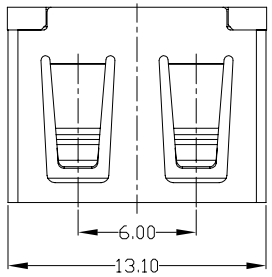

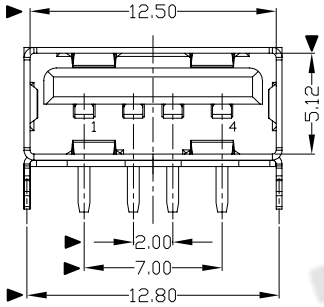

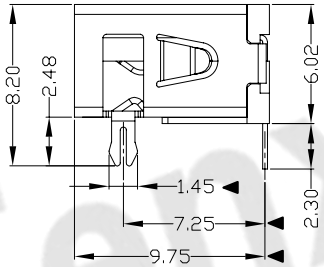

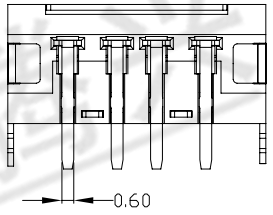

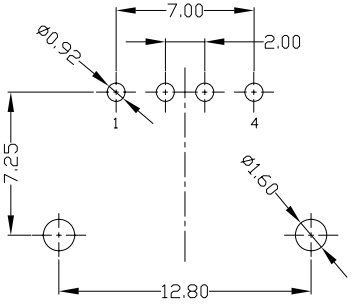

RECOMMENDED PCB LAYOUT

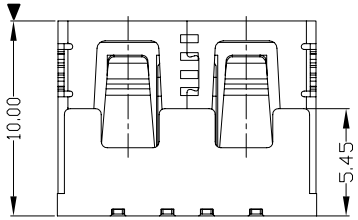

NOTES:

1. ELECTRICAL:
   1) VOLTAGE CURRENT RATING:2AMP,30V AC;
   2) INSULATION RESISTANCE: 1000MΩ,MIN;
   3) CONTACT RESISTANCE: 30mΩ MAX;
   4) WITHSTANDING VOLTAGE: 500V AC;
   5) OPERATING TEMPERATURE:-55°C TO +85°C.
2. Mechanical:
   1) Mating Force: 35N MAX
   2) Unmating Force: 10N MIN.
3. NOTE:1.DIMENSIONS MARKED "▼" TO BE CHECKED BY Q.C & IPQC.

4. PART NO.

USAF-04*N-1*R623

- 1:Au 1U"
  6:Au 30U"
- W:WHITE
  B:BLACK
- 1:PBT
  2:PA6T
  3:PA9T
  4:LCP

Bill of materials:

NO	PARTS	MATERIAL	QTY	FINISHING
3	HOUSING	PBT+30%GF	1	UL94V-0
2	SHELL	COPPER ALLOY	1	PLATED NICKEL
1	TERMINAL	COPPER ALLOY	4	PLATED GOLD/TIN

X. ±0.35	X.° ±2°	UNITS mm	
.X ±0.30	.X° ±1°	MAT'L SEE NOTE	
.XX ±0.25	.XX°		
.XXX ±0.15	.XXX°	FINISH SEE NOTE	
		Q'TY	

THESE DRAWINGS AND SPECIFICATIONS ARE THE PROPERTY OF ACCURATE INNOTECH INC. AND SHALL NOT BE REPRODUCED. COPIED OR USED IN ANY MANNER WITHOUT THE PRIOR WRITTEN CONSENT OF ACCURATE INNOTECH INC.

东莞市腾兴电子有限公司

TITLE: USB AF DIP 90度 10.0无卷边脚高8.2	PART NO.: USAF-04*N-1*R623
DR: gan 2013/5/9	DWG NO.: AII-R623
CHKD: gan 2013/5/9	SCALE 1:1 / SHEET 1/1 / REV. B / CUSTOMER DRAWING
APPD:	

Tenx 腾兴