Pb Process Capable

RoHS Compliant 2002/95/EC

REV.	ECN. NO.	APPD.

DIMENSIONS

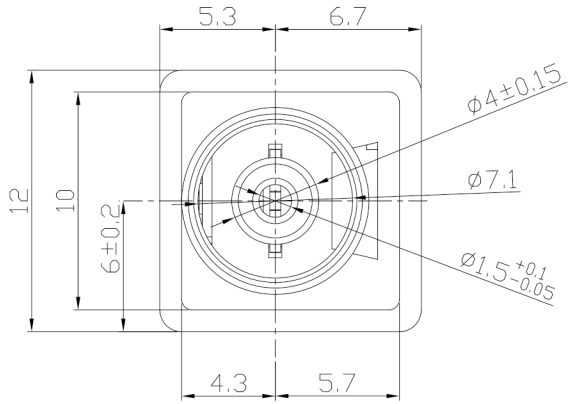

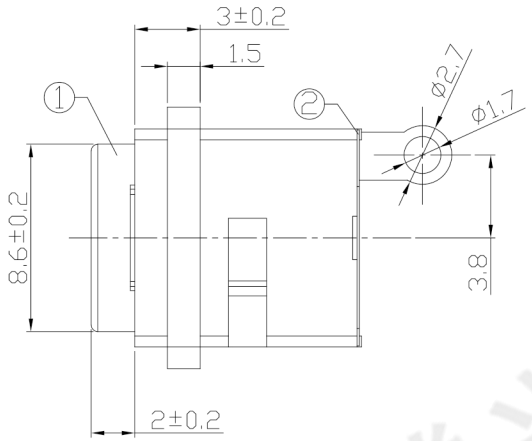

MODEL CODE:

DCB0-0037B- B F 66 BK T 0 4

(1) (2) (3)(4) (5) (6) (7)(8) (9)

(1):Series type:DIP DC POWER JACK.
(2):Series No.
(3):Schematic option: B
(4):Center pin diameter:
F=ø1.45
(5):Material of housing:
66=PA66 (Standard)
(6):Housing color:
BK=Black (Standard)
(7):Terminal plating
T=Tin(Sn)
(8):Special option:
0=No special option
(9):Packing mode:
4=Bag packing

SPECIFICATION:

1.Rating : DC 30V 2A;
2.Contact resistance: ≤30mΩ;
After test:≤50mΩ
3.Insulation resistance: ≥100MΩ (DC500V);
After test:≥50MΩ
4.Withstand voltage: 500VAC ;
5.Insertion and extraction force: 3-30N;
6.life test: 5,000 cycles;
7.Operation temperature range:-20°C～70°C;
8.Preservative temperature range:-40°C～85°C;

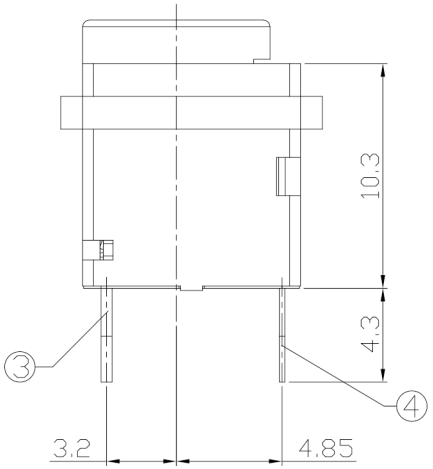

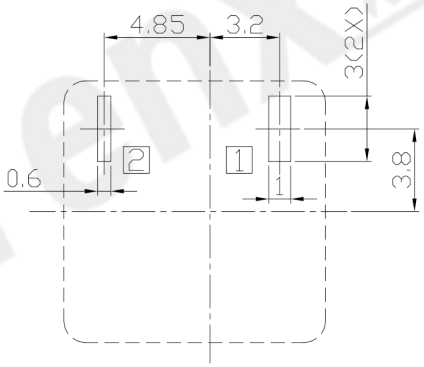

RECOMMENDED P.C.B. LAYOUT
UNSPECIFIED TOLERANCE:±0.05
(COPPER-SIDED VIEW)

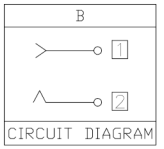

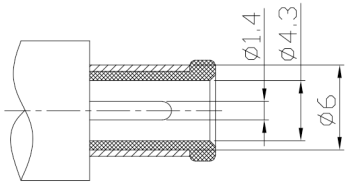

DC MATE PLUG

Tenx 腾兴

○: ITEM NO. □: TERMINAL NO.

NO.	PARTS	MATERIAL	Q'TY	FINISHING
④	Tip spring 2	Phosphor bronze t=0.25	1	Tin plating
③	Center pin 1	Phosphor bronze t=0.5	1	Tin plating
②	Cover	PP UL94HB	1	Black
①	Housing	PA66 UL94V-0	1	Black

TOLERANCE	ANGLES
±0.3	±2°

UNITS mm
MAT'L SEE NOTE
FINISH SEE NOTE
Q'TY

THESE DRAWINGS AND SPECIFICATIONS ARE THE PROPERTY OF ACCURATE INNOTECH INC AND SHALL NOT BE REPRODUCED, COPIED OR USED IN ANY MANNER WITHOUT THE PRIOR WRITTEN CONSENT OF ACCURATE INNOTECH INC.

东莞市腾兴电子有限公司

TITLE: DIP DC POWER JACK	PART NO.: DCB0-0037B
DR: Ricky 2019/04/12	DWG NO.: AB0-0037B
CHKD: Ricky 2019/04/12	SCALE 1:1 / SHEET 1/1 / REV. A / CUSTOMER DRAWING
APPD:	