REV.	ECN. NO.	APPD.

Pb Process Capable

RoHS Compliant 2002/95/EC

DIMENSIONS

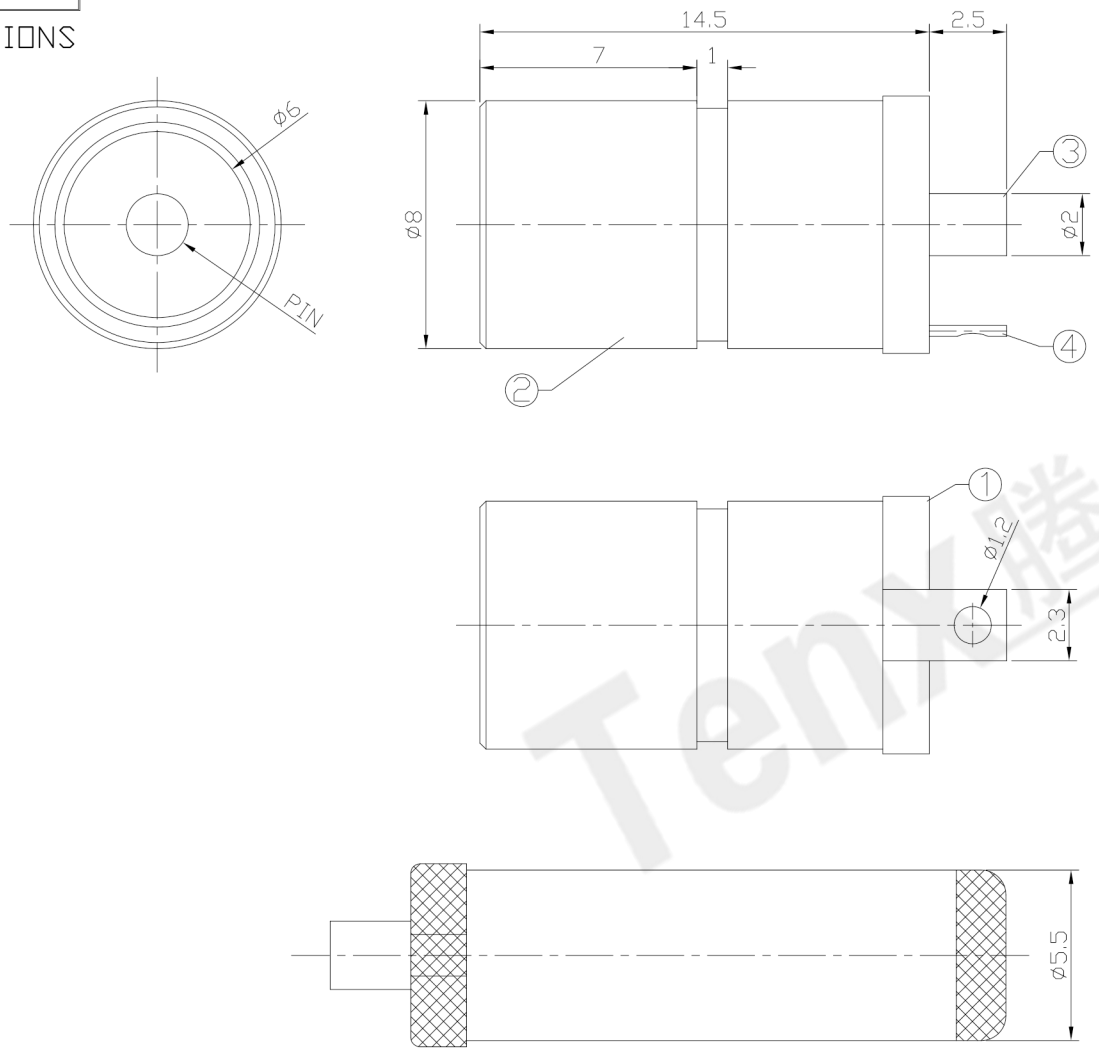

MODEL CODE:

DCB0-00840- B □ 66 BK T 0 4

(1) (2) (3)(4) (5) (6)(7)(8) (9)

(1):Series type: DC POWER JACK.
(2):Series No.
(3):Schematic option: B
(4):Center pin diameter:
H=2.0 , I=2.35 , J=2.5
(5):Material of housing:
66=PA66 (Only)
(6):Housing color:
BK=Black (Only)
(7):Terminal plating
T=Tin(Sn) (Standard)
S=Silver(Ag)
G=Gold(Au)
(8):Special option:
0=No special option
(9):Packing mode:
4=Bag packing

SPECIFICATION:
1.Rating : DC 20V 3A;
2.Contact resistance: ≤50mΩ;
3.Insulation resistance: ≥100MΩ (DC250V);
4.Withstand voltage: 500VAC ;
5.Insertion and extraction force: 3-30N;
6.life test: 5,000 cycles;
7.Operation temperature range:-20°C~70°C;
8.Preservative temperature range:-40°C~85°C;

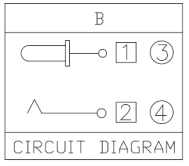

Model No.	H	I	J
CENTER PIN	ø2.0	ø2.35	ø2.5

○: ITEM NO. □: TERMINAL NO.

NO.	PARTS	MATERIAL	Q'TY	FINISHING
④	spring	Stainless steel	1	Sn-Plating
③	Center pin	Brass	1	Sn-Plating
②	Bushing	Brass	1	Ni-Plating
①	Housing	PA66	1	

TOLERANCE	ANGLES
±0.3	±2°

UNITS mm
MAT'L SEE NOTE
FINISH SEE NOTE
Q'TY

THESE DRAWINGS AND SPECIFICATIONS ARE THE PROPERTY OF ACCURATE INNOTECH INC AND SHALL NOT BE REPRODUCED, COPIED OR USED IN ANY MANNER WITHOUT THE PRIOR WRITTEN CONSENT OF ACCURATE INNOTECH INC.

东莞市腾兴电子有限公司

TITLE: DC POWER JACK	PART NO.: DCB0-00840
DR: Ricky 2019/05/02	DWG NO.: AB0-00840
CHKD: Ricky 2019/05/02	SCALE 1:1 / SHEET 1/1 / REV. A / CUSTOMER DRAWING
APPD:	

Tenx 腾兴