Pb Process Capable

RoHS Compliant 2002/95/EC

Halogen Free

| REV. | ECN. NO. | APPD. |
|---|---|---|
| | | |
| | | |
| | | |

# DIMENSIONS

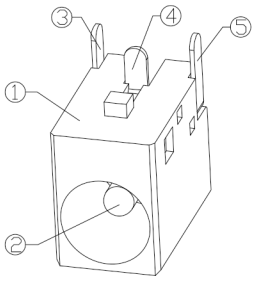


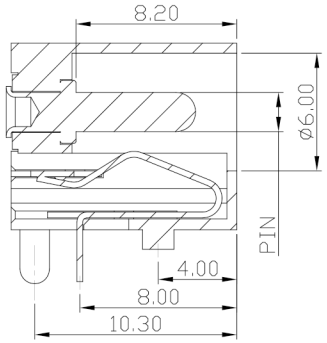


A-A SECTION

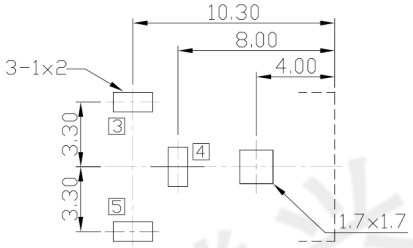


RECOMMENDED P.C.B. LAYOUT
UNSPECIFIED TOLERANCE:±0.05
(TOP view)

MODEL CODE:

DCS0-02060- A □ 10 BK S 0 4
(1) (2) (3)(4)(5)(6)(7)(8)(9)

(1):Series type:DIP DC POWER JACK.
(2):Series No.
(3):Schematic option: A
(4):Center pin diameter:
H=ø2.0mm , J=ø2.5mm
(5):Material of housing:
10=PA10T
(6):Housing color:
BK=Black
(7):Terminal plating
S=Silver(Ag)
(8):Special option:
0=No special option
(9):Packing mode:
1=Reel packing
4=Bag packing

Specification:
1.Rating :DC 24V 7A.
2.Contact resistance :≤30mΩ.
3.Insulation resistance :≥100MΩ (DC500V).
4.Withstanding voltage: 500VAC .
5.Insertion and extraction force: 3~30N.
6.life test: 5000cycles min.
7.Operation temperature range:-25°C~85°C

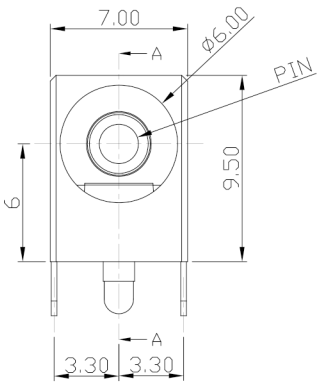


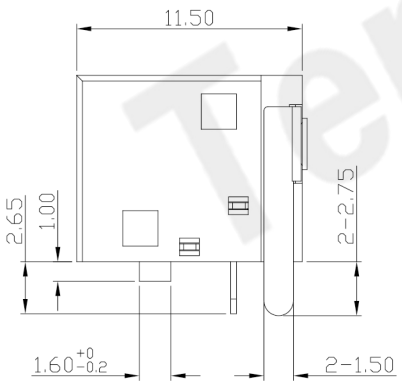


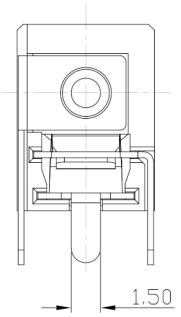


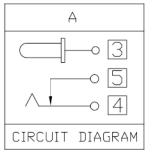


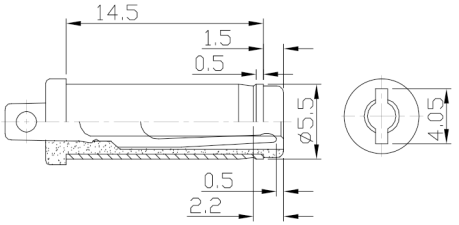


| Model No. | H | J |
|---|---|---|
| CENTER PIN | ø2.0 | ø2.5 |

DC MATE PLUG
(TOLERANCE ±0.05)

Bill of materials:

| NO. | PARTS | MATERIAL | Q'TY | FINISHING |
|---|---|---|---|---|
| ⑤ | SHUNT TERMINAL | BRASS T=0.30 | 1 | Ag 20U" OVER NI 50U" |
| ④ | SPRING TERMINAL | PBS T=0.30 | 1 | Ag 20U" OVER NI 50U" |
| ③ | CENTER PIN TERMINAL | BRASS T=0.30 | 1 | Ag 20U" OVER NI 50U" |
| ② | CENTER PIN | BRASS | 1 | NI 60U" OVER CU80U" |
| ① | P1_HOUSING | PA10T BLACK | 1 | UL94V-0 |

| TOLERANCE | ANGLES |
|---|---|
| .X ± 0.5 | X°.±2° |
| .XX ± 0.3 | .X°±1° |
| .XXX ± 0.2 | |

THESE DRAWINGS AND SPECIFICATIONS ARE THE PROPERTY OF ACCURATE INNOTECH INC AND SHALL NOT BE REPRODUCED, COPIED OR USED IN ANY MANNER WITHOUT THE PRIOR WRITTEN CONSENT OF ACCURATE INNOTECH INC.

UNITS mm
MAT'L SEE NOTE
FINISH SEE NOTE
Q'TY

东莞市腾兴电子有限公司

| | |
|---|---|
| TITLE: DIP DC POWER JACK | PART NO.: DCS0-02060 |
| DR: Ricky 2019/03/25 | DWG NO.: ASS-02060 |
| CHKD: Ricky 2019/03/25 | SCALE 1:1 / SHEET 1/1 / REV. A / CUSTOMER DRAWING |
| APPD: | |

Tenx 腾兴