REV.	ECN. NO.	APPD.

Pb Process Capable

RoHS Compliant 2002/95/EC

DIMENSIONS

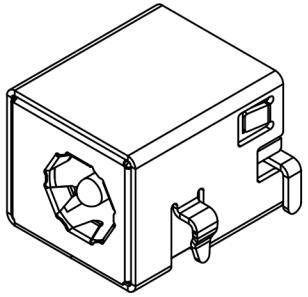

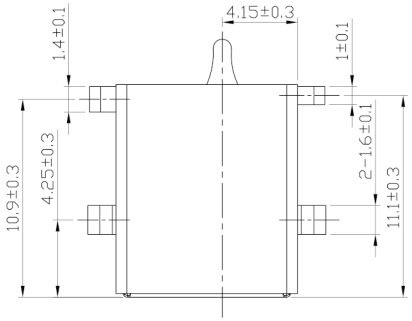

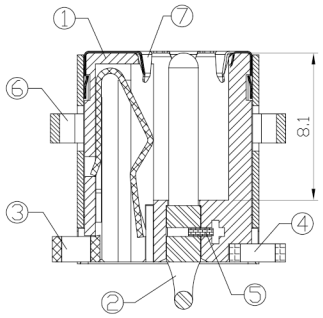

SECTION A-A

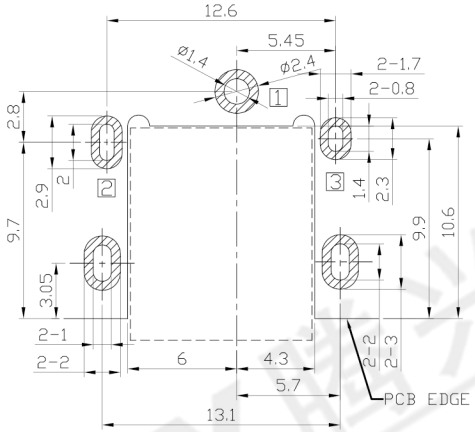

PCB HOLES(TOP VIEW) t=1.2mm

NOTE:GENERAL TOLERANCE:±0.05mm

MODEL CODE:

DCB0-0116B- A G 9T BK S W 1

(1) (2) (3)(4)(5)(6)(7)(8)(9)

(1):Series type:SMD DC POWER JACK.
(2):Series No.
(3):Schematic option: A
(4):Center pin diameter:
G=Ø1.65
(5):Material of housing:
9T=PA9T(Standard)
(6):Housing color:
BK=Black(Standard)
(7):Terminal plating:
S=Silver(Ag)
(8):Special option:
W=White Reel
(9):Packing mode:
1=Reel packing

SPECIFICATION

1.Rating : DC 20V 7A;
2.Contact resistance: ≤30mΩ,
After life test:≤50mΩ;
3.Insulation resistance: ≥100MΩ (DC500V),
After life test:≥50MΩ;
4.Withstand voltage: 500VAC ;
5.Insertion and extraction force: 3-30N;
6.life test: 5,000 cycles;
7.Operation temperature range:-20°C～70°C;
8.Preservative temperature range:-40°C～85°C;

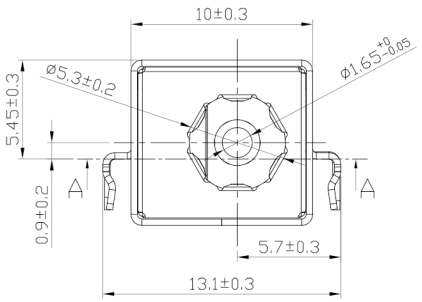

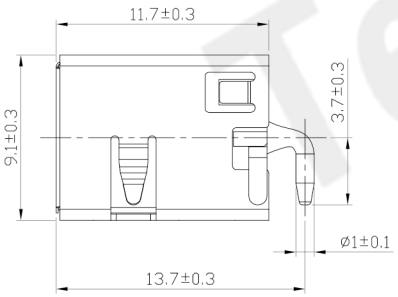

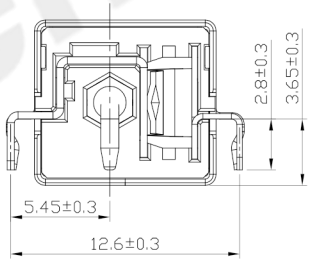

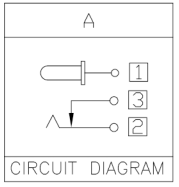

CIRCUIT DIAGRAM

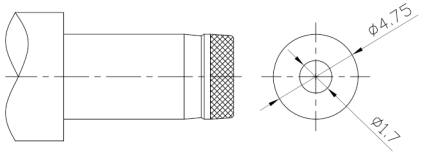

DC MATE PLUG

○: ITEM NO. □: TERMINAL NO.

NO.	PARTS	MATERIAL	Q'TY	FINISHING
⑦	Ground terminal	Steel Alloy 0.10t	1	
⑥	Shield	Copper Alloy 0.35t	1	Ni Plating
⑤	Terminal	Copper Alloy 0.40t	1	
④	Shunt terminal 3	Copper Alloy 0.40t	1	Ag Plating
③	Tip spring 2	Copper Alloy 0.30t	1	Ag Plating
②	Center pin 1	Zn Alloy	1	Ni Plating
①	Housing	Hi-Tem. Thermoplastic	1	Black

TOLERANCE	ANGLES
±0.3	±2°

THESE DRAWINGS AND SPECIFICATIONS ARE THE PROPERTY OF ACCURATE INNOTECH INC ,AND SHALL NOT BE REPRODUCED, COPIED OR USED IN ANY MANNER WITHOUT THE PRIOR WRITTEN CONSENT OF ACCURATE INNOTECH INC.

UNITS mm

MAT'L SEE NOTE

FINISH SEE NOTE

Q'TY

东莞市腾兴电子有限公司

TITLE: SMD DC POWER JACK

PART NO.: DCB0-0116B

DR: Ricky 2018/06/27

CHKD: Ricky 2018/06/27

APPD:

DWG NO.: AB0-0116B

SCALE	SHEET	REV.	CUSTOMER DRAWING
1:1	1/1	A	